WHEEL LOADER | 435S

Operating weight: 14366kg Gross engine power: 172kW (230hp) Full turn tipping load: 8283kg Standard shovel capacity: 2.4m³

JCB

A QUALITY PROCESS.

WE KNOW THAT A WHEEL LOADER IS A KEY PART OF THE FARM'S PROCESS. THAT'S WHY THE JCB 435S IS BUILT ON A FOUNDATION OF QUALITY AND RELIABILITY. THE PROCESSES WE'VE USED TO DESIGN AND MANUFACTURE THEM WILL SAFEGUARD YOUR WORKING PROCESS, HOUR AFTER HOUR, DAY AFTER DAY.

We use state-of-the-art manufacturing processes like robot machining, precision paint technology and innovative assembly techniques to achieve the very highest levels of quality.

Designed to work hard.

1 Finite element analysis, as well as extensive endurance and rig testing ensure superior structural strength and durability. Cold cell testing guarantees starting performance down to -20°C.

2 The new front chassis is more durable than ever; it's been strengthened with additional ribs and gussets for maximum service life.

Precision machining provides high tolerances and accurate location of pins and bushes.

Protecting ancillaries.

3 A solid cast rear counterweight protects the rear of the machine – including the rear lights and cooling pack – from damage.

For additional protection, there are impact-resistant fender edges and trims fitted.

Well articulated.

4 Hoses are neatly routed and clamped through the articulation joint, well away from any pinch points.

5 Designed to tolerate both vertical and horizontal loadings, the articulation joint has a heavy-duty centre pin and oversized bush, as well as twin taper roller bearings on the top box joints.

These machines have integral steel fluid tanks for the ultimate in leak protection; a far superior solution to the plastic tanks favoured by some competitors.

3

4

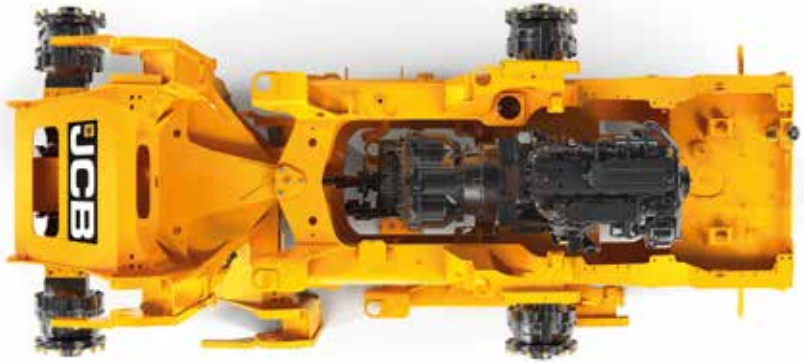

5

PRODUCTIVE PERFORMANCE.

THE 435S CAN PERFORM GREAT FEATS OF PRODUCTIVITY. DELIVERING A MASSIVE 230HP, AND WEIGHING UNDER 14 TONNES, THE MACHINE HAS A HUGE POWER-TO-WEIGHT RATIO OF 16.8HP/TONNE FOR ULTIMATE PUSHING, CLIMBING AND ROADING PERFORMANCE.

There's no need to worry about wasting time and money replacing a diesel particulate filter (DPF) on your loader; its Cummins engine meets Tier 4 Final/Stage IV legislation using only exhaust gas recirculation (EGR), selective catalytic reduction (SCR) and diesel oxidation catalyst (DOC). This setup also improves fuel economy.

1

Optional 15 tonne tow hitch with hydraulic trailer brakes and 12V trailer electrics further improve versatility on the 435S.

Drivetrain performance.

1 The Cummins QSB 6.7-litre engine achieves maximum engine power (172kW) and peak torque (945Nm) at low revs for excellent response.

A variable geometry turbocharger provides increased performance at low engine speed for improved cycle times and tractive effort.

Loading productivity.

2 JCB's optional quickhitch makes attachment changing quick and efficient. The quickhitch is designed to be compatible with aftermarket attachments too.

3 Powerful twin variable displacement piston pump hydraulics can circulate a massive 264 l/min for fast cycles and excellent multi-function capability.

2

3

Loading productivity (continued).

4 The high torque (HT) arm design on the 435S gives great visibility to the loader end, as well as offering parallel lift, making it ideal for multi-attachment use.Constant torque throughout the full carriage rotation provides excellent power and attachment control. Choose a HT high lift on the 435S and you can use the machine for higher loading height applications (hopper, trailer and spreader loading).

Drivetrain productivity.

5 The unique 6-speed transmission with torque convertor lock-up in every gear provides closer gear ratios for better acceleration, hill climbing and roading performance. The lock-up element eliminates losses from the torque converter for faster cycle times and improved efficiency.

6 The innovative electronic management can perform progressive clutch cut-off for efficient, productive loader control. This feature controls tractive effort via the transmission, diverting maximum power to the loader hydraulics and reducing service brake wear and fuel consumption.

7 With a choice of axle options you can tailor a 435S to any application.

› Open differentials are ideal for hard standing ground conditions.

› Limited slip differential is perfect for soft, muddy terrain with reduced traction.

› Open differentials with an automatic locking front axle differential provide excellent traction in varied ground conditions – ideal for straight line pushing.

6

4 *HT Standard Lift* *HT High Lift*

7

EFFICIENT BY DESIGN.

THE JCB 435S IS DESIGNED TO MOVE MORE MATERIAL FOR LESS. TO ACHIEVE THIS, WE'VE DESIGNED THE ENGINE, AXLES, DRIVELINE AND HYDRAULICS TO WORK IN HARMONY WITH EACH OTHER, FOR ULTIMATE EFFICIENCY.

3

An efficient engine.

1 A hydraulic cooling fan automatically reacts to ambient temperature and adjusts the fan speed to optimise energy and reduce fuel consumption. An additional benefit of this setup is reduced noise levels.

2 Eco Mode caps engine speed at 1800rpm for reduced fuel consumption. Productivity nonetheless remains formidable.

3 Our torque lock-up 6 speed transmission gives you up to 100% efficiency in all gears for improved fuel consumption. Closer gear ratios provide lower engine speed in each gear.

1

2

An efficient engine (continued).

4 Wheel speed braking means the brakes rotate at the same speed as the wheels for heat and drag reduction, as well as improved fuel economy and access for maintenance and repairs.

5 Unloaded spool valves in the valve block mean that arms lower under gravitational, not hydraulic force, reducing fuel consumption.

6 JCB's innovative variable displacement pumps feed a load-sensing valve block which only consumes power on demand, providing precise, efficient loader control.

7 No DPF means unnecessary additional fuel piping is eliminated as is the potentially dangerous temperatures involved in regeneration. The fuel that would have been needed to restore your DPF can be used instead for actual productive work.

COMMANDPLUS controls.

JCB Smoothride load suspension limits shock loadings and therefore reduces material spillage and structural stress, as well as increasing operator comfort. The speed of engagement is adjustable from within the cab using the latest state-of-the-art CommandPlus controls.

Adjustable SRS engagement speed.

Adjustable Auxiliary control.

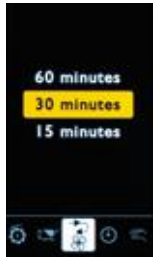

Adjustable reversing fan intervals.

COMMANDPLUS.

THE LATEST JCB 435S WHEEL LOADER BOASTS OUR ALL-NEW COMMAND PLUS CAB. THIS UNIQUE APPROACH TO ERGONOMICS IS THE RESULT OF A RADICAL RETHINK AND A RIGOROUS RESEARCH PROGRAMME. EXPECT BEST-IN-CLASS COMFORT, VISIBILITY, ERGONOMICS AND QUIETNESS.

1

See the difference.

1 You'll immediately notice the totally redesigned ROPS structure; this has allowed the A pillars to be moved to the same width as the rear of the cab, providing a larger interior with a superb panoramic front windscreen. All switches and auxiliary controls are now located on the right-hand A-pillar for easier access.

2 Using your machine's simple, dedicated menu interface is easily done with an intuitive optional rotary controller.

3 Operating your 435S loader is now easier than ever. All of the controls are seat-mounted, even going as far as to move with the seat suspension. You can also select the control system that's best for your operators: choose from single lever joystick or multi-lever configurations, all using electro-hydraulics for the ultimate in precision.

4 There are two full colour LCD screens to navigate the operating menus, one of which doubles as a monitor for the optional rear-view camera and CommandPlus control menu.

2

3

3

4

4

The noise level in the cab is an incredibly low 68dB(a): so quiet you can hardly hear the engine running.

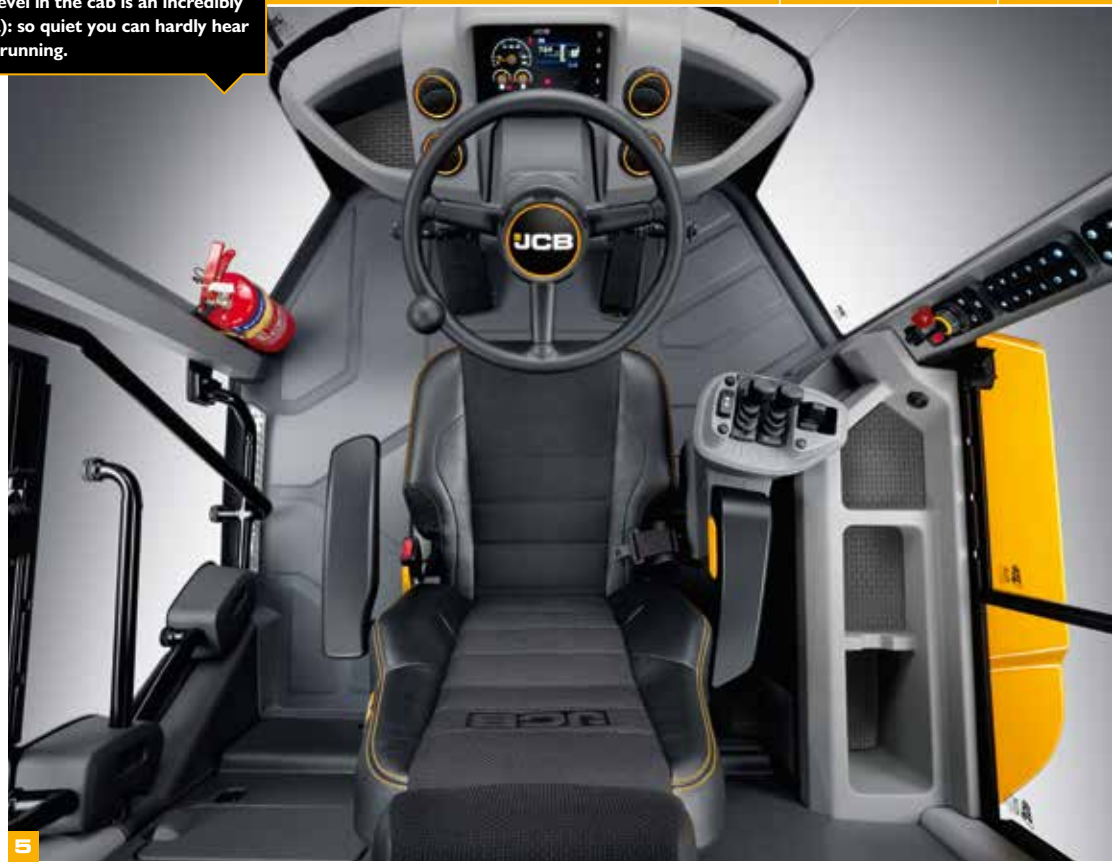

5

5 To keep the operator environment comfortable for working at all times, we've positively pressurised the cab to eliminate dust and fumes.

6 After extensive research into operator ergonomics, we've devised the Command Driving Position, which boasts the very optimal control layout for a multitude of different driver shapes and sizes available, ranging from an air suspension standard seat to a super deluxe half leather seat, featuring fully adjustable heating and cooling functionality, electrically adjustable lumber support and adjustable dampers.

7 A set and forget feature makes operator access even easier. In short, your preferred steering wheel position is stored and can be instantly returned to, even after you've folded the wheel away.

Specify your 435S with either air conditioning or automatic climate control to create perfect working temperatures.

With a dedicated media port on board, you can be assured of superb connectivity for all your electronic devices.

A sliding window on both sides of the cab allows easy communication with people outside the machine.

The electronic handbrake offers numerous advantages: it's quick and easy to operate, and, because there's no cable, there are fewer holes in the cab. This helps to isolate the operator environment further.

7

6

6

LOW MAINTENANCE LONG INTERVALS.

WHEEL LOADERS NEED TO SPEND THE MAXIMUM AMOUNT OF TIME HARD AT WORK. WE'VE DESIGNED THE 435S TO DO JUST THAT, WITH LONG SERVICE INTERVALS AND QUALITY COMPONENTS.

Routine maintenance.

1 It's easy to get to the engine on a new JCB 435S with a large automatic opening single-piece bonnet.

2 Accessing the DEF (Diesel Exhaust Fluid) tank is similarly straightforward via the lockable grille at the rear of the machine.

You can check washer fluid level, engine oil and coolant from inside the cab, with all other routine checks and grease points located at ground level. This makes life both easier and safer.

3 Most Tier 4 Final/Stage IV engines use a costly Diesel Particulate Filter (DPF) that can cost a lot of money and time when it needs replacing. The Cummins engine is DPF-free, reducing your servicing and running costs.

4 A large single-faced wide-core cooling pack package with swing out reverse fan, provides unrivalled quick, easy and safe cleaning.

5 With the optional auto lubrication kit, your machine will take care of its own greasing requirements.

Less servicing, more service

5 The CommandPlus cab relays machine condition giving real time alerts, safeguarding both the machine and the operator.

The intuitive CommandPlus help function provides the operator with meaningful descriptions of in-cab switch function. Using the "?" button, this allows new or unfamiliar operators to quickly and easily understand machine functions without having to refer to the operators manual.

6 By using premium components in the 435S (Cummins engine, ZF transmissions and axles, Rexroth pumps and Parker valve blocks), we've built in long service life as standard.

7 Full hydraulic dual circuit braking with multiple oil immersed discs gives the braking system a virtually maintenance-free lifespan.

A cyclonic engine fan scavenge filter provides four times the filtering capacity of a standard air filter. It's a longer life system, with fewer components and a higher level of efficiency, making for better engine protection. There's a large 400-litre fuel tank fitted, which ensures maximum working hours between refills.

Heating and ventilation filters are conveniently located behind an external access panel. The main fuse board and relays have been repositioned next to the door for easy access.

5

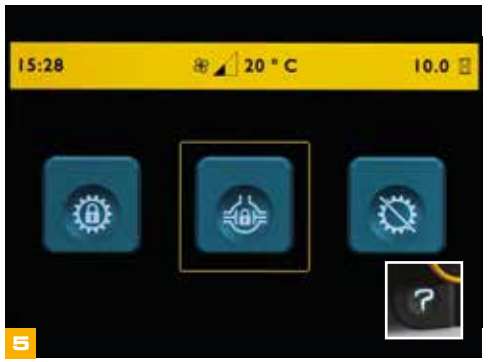

5

7

COMMANDPLUS controls.

If you're planning to use your wheel loader in environments with large amounts of airborne debris, opt for the adjustable reversing fan. The fan can be operated via the CommandPlus controls, and even swings out for easy cleaning access.

5

5

5

DRIVE SAFELY.

THE NEW JCB 435S ARE DESIGNED TO KEEP THE OPERATOR AND YOUR FARM SAFE AT ALL TIMES. GREAT VISIBILITY, NON-SLIP SURFACES AND FULL ROPS/FOPS PROTECTION ARE JUST THE START.

4

Safely does it.

1 Our rear-view camera displays an unobstructed rearward view on the in-cab colour monitor onboard your 435S.

2 Superb visibility in dark conditions is guaranteed with JCB's optional 360 degree LED lighting.

3 You'll find the rear-view mirrors mounted in front of the A-pillars for improved all-round visibility.

Interior mirrors, electrical adjustable heated exterior mirrors and rear camera combine to offer excellent views to every corner of your machine.

4 Visibility over the rear bonnet is excellent because the air cleaner is underneath the bonnet and the exhaust stack is located centrally.

1

2

3

Safely does it (continued).

5 Access steps on the 435S are inclined and equally spaced, complemented by well positioned grab handles for three points of contact at all times.

6 Full fender coverage flaps have been carefully designed to keep forward spray to a minimum for all tyre options. This increases safety and decreases debris build-up.

7 Door hinges are now mounted on the A-pillar; this simple change has created much better access Via a larger and wider door aperture.

It also means you can access the rear of your loader more safely. The battery and tool box are lockable for added security.

8 The cab is isolator-mounted, compliant with ROPS/FOPS standards, and positively pressurised against dust. You can choose from fresh air or carbon filters as well.

9 Engines fitted with a DPF can pose an increased fire risk because extreme heat can be created in regeneration mode. The new 435S doesn't use a DPF, so this is no cause for concern.

Non-slip walkways allow for safe movement around the machine.

LIVELINK, WORK SMARTER.

LIVELINK IS AN INNOVATIVE SOFTWARE SYSTEM THAT LETS YOU MANAGE JCB MACHINES REMOTELY – ONLINE, BY EMAIL OR BY MOBILE PHONE. ACCESS EVERYTHING FROM MACHINE ALERTS TO FUEL REPORTS AND HISTORY INFORMATION, WITH ALL DATA STORED AT A SECURE CENTRE.

Productivity and cost benefits

By providing information like idle time monitoring and machine fuel consumption, JCB Livelink helps reduce your fuel usage, saving money and improving productivity. Machine location information can help improve efficiency and perhaps even reduce insurance costs.

Maintenance benefits

Manage machine maintenance easily – accurate hours monitoring and service alerts improve maintenance planning, while real-time location data helps you manage your fleet. Critical machine alerts and maintenance history records are also available.

Security benefits

Livelink's real-time geofencing alerts tell you when machines move out of predetermined zones, and real-time curfew alerts inform you of unauthorised usage. Further benefits include real-time location information.

A GREAT BUSINESS DECISION.

WE'LL PROVIDE YOU WITH FIRST CLASS SUPPORT AND ASSISTANCE TO SUIT YOUR EXACT BUSINESS NEEDS RIGHT FROM DAY ONE. SO WHEREVER YOU ARE, YOUR MACHINE WILL ALWAYS PERFORM TO ITS FULL POTENTIAL – ONE OF MANY REASONS WHY STARTING A WORKING RELATIONSHIP WITH JCB IS A GREAT BUSINESS DECISION.

Machine selection

Your JCB dealer has the right technical knowledge and expertise to ensure that you assess all the machine options available to you. This includes rental options and new or used machine sales.

Rebuild and Refurbishment Programme

If your business isn't in a position to buy a brand new machine, then JCB's Rebuild and Refurbishment programme can help you to extend the service life of your current vehicle cost-effectively.

Technical support

All local JCB dealers have instant access to factory expertise and technical support to provide you with the maximum machine uptime. JCB's Global Parts Centres, meanwhile, deliver around 95% of all parts anywhere in the world within 24 hours.

Component monitoring

JCB machines benefit from a sophisticated component monitoring programme that provides preventative maintenance and oil sampling to keep everything working at its optimum level.

Service support

We offer a range of extended warranties, from JCB PremierCover (full comprehensive cover) to JCB PowertrainCover (engine, axles, transmission and hydraulic pump cover). Service agreements, as well as service-only or Repair and Maintenance contracts ensure that we have the up-time of your wheel loading shovel totally covered. Our dealer maintenance specialists around the world charge competitive labour rates, and offer non-obligation quotations as well as fast, efficient repair work.

Finance and Insurance

Finance and Insurance specialists are always on-hand to provide fast, flexible, competitive quotes. Naturally, packages can be tailored to suit your specific business needs.

STATIC DIMENSIONS

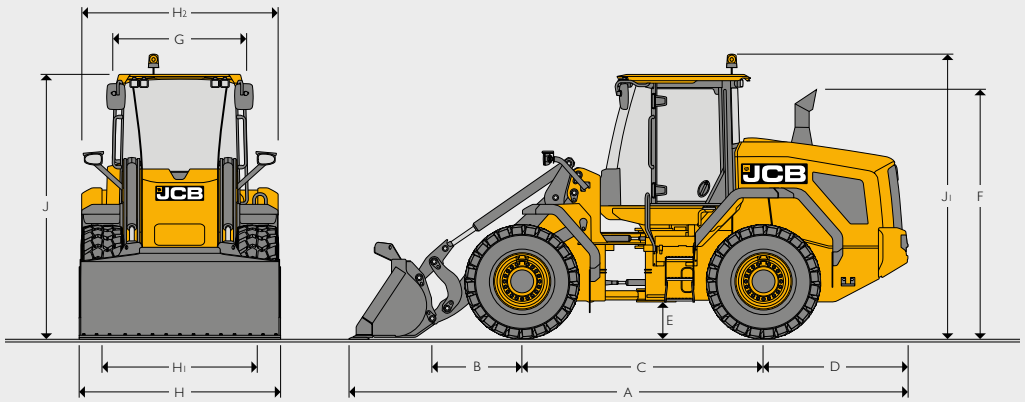

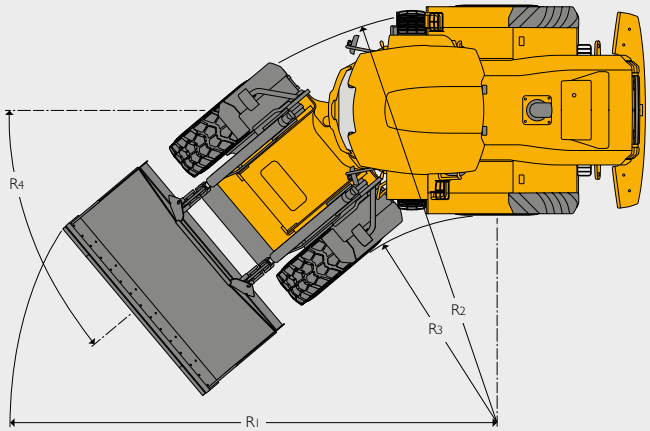

			435S	435S HL
A	Overall length	mm	7203	7524
B	Axle to pivot pin	mm	1252	1580
C	Wheelbase	mm	3050	3050
D	Axle to counterweight face	mm	1841	1841
E	Minimum ground clearance	mm	491	491
F	Height over exhaust	mm	3154	3154
G	Width over cab roof	mm	1594	1594
H	Maximum width over tyres	mm	2961	2961
H_1	Wheel track	mm	2229	2229
H_2	Maximum width over fenders	mm	2961	2961
J	Height over cab roof and lowered beacon	mm	3742	3742
J_1	Height over raised beacon	mm	4102	4102
	Front axle weight	kg	6213	6592
	Rear axle weight	kg	7842	7673
	Total weight	kg	14055	14265
	Height over engine cover from ground fully open	mm	3692	3692
	Increase in vehicle length with bonnet open (rear grille shut)	mm	+928	+928

435S based on a machine equipped with Michelin 750/65R26 MegaXBib tyres & direct mount 1.9m³ shovel and toe plates and standard counterweight.
435S HL based on a machine equipped with Michelin 750/65R26 MegaXBib tyres & direct mount 1.9m³ shovel and toe plates and standard counterweight.

			435S	435S HL
R1	Maximum turn radius over shovel	mm	5902	6035
R2	Maximum turn radius over tyre	mm	5483	5483
R3	Inside turn radius	mm	2707	2707
R4	Articulation angle	degrees	40	40

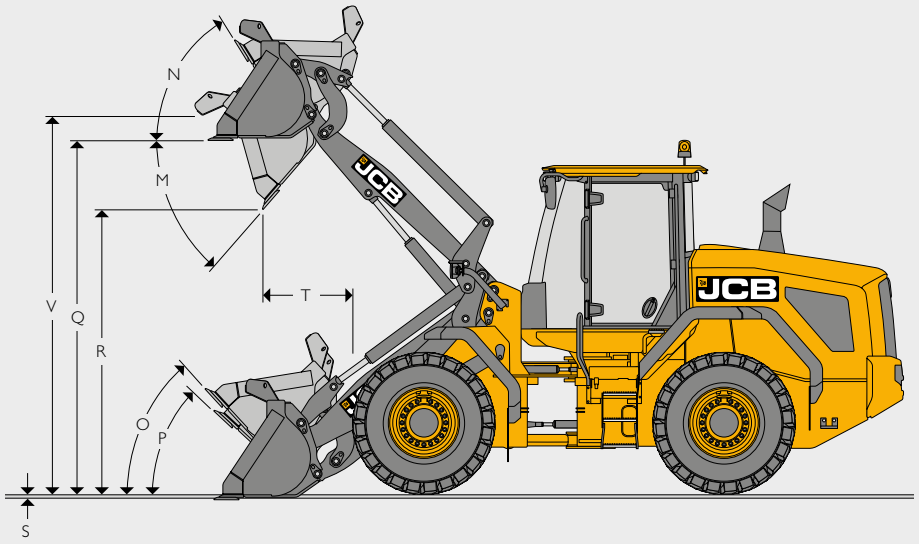

TYRE SIZE

				435S		435S HL		Dimensions	
Tyre size	Manufacturer	Type	Operating weight (kg)	STL kg	FTTL kg	STL kg	FTTL kg	Vertical mm	Width mm
620/75 R26	MICHELIN	XBIB	-200	-141	-122	-120	-73	-13	-278
Heavy-duty counterweight (optional)			271	531	487	454	483	0	0

LOADER DIMENSIONS 435S/435S HL

	Model		435S									435S HL								
	Shovel mounting		Direct				Quickhitch					Direct				Quickhitch				
	Shovel type		General purpose				General purpose				Grain Shovel	General purpose				General purpose				Grain Shovel
	Shovel equipment		Reversible toeplate				Reversible toeplate					Reversible toeplate				Reversible toeplate				
	Shovel capacity (SAE heaped 100%)	m^3	1.9	2.1	2.4	2.7	1.9	2.1	2.4	2.7	4	1.9	2.1	2.4	2.7	1.9	2.1	2.4	2.7	4
	Shovel capacity (struck)	m^3	1.616	1.83	2.057	2.346	1.616	1.83	2.057	2.346	4	1.616	1.83	2.057	2.346	1.616	1.83	2.057	2.346	4
	Shovel width without teeth/toeplate fitted	mm	2548	2548	2700	2700	2548	2548	2700	2700	2750	2548	2548	2700	2700	2548	2548	2700	2700	2750
	Shovel width with teeth/toeplate fitted	mm	2548	2548	2700	2700	2548	2548	2700	2700	2750	2548	2548	2700	2700	2548	2548	2700	2700	2750
	Shovel weight	kg	894	938	1198	1261	889	933	1170	1232	1430	894	938	1198	1261	889	933	1170	1232	1430
	Maximum material density STD counterweight *	kg/m^3	2446	2190	1863	1633	2264	2028	1725	1512	750	2072	1855	1571	1377	1920	1720	1457	1276	601
	Tipping load straight STD counterweight *	kg	10999	10893	10627	10492	10223	10125	9885	9756	8756	9324	9236	8979	8864	8685	8605	8366	8255	7053
	Tipping load full turn STD counterweight *	kg	9296	9201	8943	8820	8605	8516	8283	8166	7276	7873	7793	7543	7437	7297	7224	6992	6890	5830
	Payload STD counterweight *	kg	4648	4600	4471	4410	4302	4258	4141	4082	3638	3937	3896	3771	3718	3648	3612	3496	3445	2915
	Maximum breakout force	kN	138	128	123	115	121	113	106	99	56	138	128	123	115	121	113	106	99	56
M	Dump angle maximum	degrees	49	49	49	49	49	49	49	49	49	45	45	45	45	45	45	45	45	45
N	Roll back angle full height	degrees	58	58	58	58	58	58	58	58	58	58	58	58	58	58	58	58	58	58
O	Roll back at carry	degrees	48	48	48	48	48	48	48	48	48	50	50	50	50	50	50	50	50	50
P	Roll back at ground level	degrees	43	43	43	43	43	43	43	43	43	48	48	48	48	48	48	48	48	48
Q	Load over height	mm	3642	3642	3640	3640	3642	3642	3640	3640	3634	4070	4070	4058	4058	4069	4069	4058	4058	4053
R	Dump height (45 deg dump)	mm	2938	2886	2853	2779	2810	2757	2719	2651	2086	3393	3344	3308	3244	3273	3224	3187	3124	2593
S	Dig depth	mm	23	23	25	25	23	23	25	25	31	60	60	87	87	85	85	87	87	93
T	Reach at dump height	mm	818	871	901	960	936	975	1013	1065	1547	946	995	1029	1092	1073	1115	1149	1212	1733
V	Pin height	mm	3923	3923	3923	3923	3958	3958	3958	3958	3958	4342	4342	4342	4342	4388	4388	4388	4388	4388
	Reach maximum (45 deg dump) horizontal arm	mm	1644	1694	1726	1790	1751	1816	1847	1911	2367	1992	2042	2074	2138	2099	2164	2195	2259	2367
	Operating weight (includes 75kg operator and full fuel and DEF tanks)	kg	13760	13804	14064	14127	14055	14099	14336	14398	14816	13970	14014	14274	14337	14265	14309	14546	14608	15026

* Assumes machine is fitted with 750 MegaXBib, 6 speed transmission.

ENGINE		
Type		Cummins
Model		QSB
Capacity	litres	6.7
Aspiration		Turbo Charged
Cylinders		6
Max gross power to SAE J1995/ISO 14396	kW (hp) @ 1600rpm	172 (230)
Rated gross power to SAE J1995/ISO 14396	kW (hp) @ 2100rpm	164 (220)
Nett power to ISO 9249	kW (hp) @ 2100rpm	154 (206)
Max torque	Nm @ 1500rpm	945
Valves per cylinder		4
Air cleaner		Cyclonic pre-filter with engine fan scavenge system
Fan drive type		Hydraulically driven cooling fan
Emissions		EU Stage IV, US EPA Tier 4F

TRANSMISSION			
		6 speed with lock up converter	
Make		ZF	
Model		6WG210	
		Forward	Reverse
1	kph	5.8	6.1
2	kph	9.0	15.2
3	kph	14.5	36.1
4	kph	22.2	-
5	kph	34.3	-
6	kph	52.3	-

Please note the above data is based on 750Megxbib tyres.

AXLES	
Make	ZF
Model	ZF MT-L 3085 II (front), ZF MT-L 3075 II (rear)
Overall axle ratio	21.53 : 1
Rear axle oscillation	+/- 10.5 Degrees

All available with open differential, limited slip differential, open differential with auto-locking front.

ELECTRICAL SYSTEM		
System voltage	Amps	24
Alternator output	Amp hour	120
Battery capacity	Amp hour	110

HYDRAULICS		
Pump type		Twin variable displacement piston pumps
Pump 1 max. flow	l/min	132
Pump 1 max. pressure	bar	250
Pump 2 max. flow	l/min	132
Pump 2 max. pressure	bar	160
Hydraulic cycle times at full engine revs		
Arms raise (full bucket)	Seconds	4.7
Shovel dump (full bucket)	Seconds	1.8
Arms lower (empty bucket)	Seconds	2.8
Total cycle	Seconds	9.3

NOISE AND VIBRATION				
			Uncertaincy	Measurement conditions.
Noise at the operator station	LpA	68 dB	+/- 1 dB	Determined in accordance with the test method defined in ISO 6396 and the dynamic test condition defined on 2000/14/EC.
Noise emission from the machine	LWA	104 dB	+/- 1 dB	Guaranteed equivalent sound power (external noise) determined in accordance with the dynamic test conditions defined in 2000/14/EC.
Whole body vibration	m/s^2	0.44	+/- 0.11 dB	ISO 2632-1:1997 normalised to an 8h reference period and based upon a test cycle comprising of loader work (soil).
Hand-arm vibration	m/s^2	<2.5	N/A	ISO 5349-2:2001 dynamic test conditions.

SERVICE FILL CAPACITIES		
		435S
Hydraulic system	litres	210
Fuel tank and auxiliary fuel tank	litres	400
DEF Tank	litres	40

STEERING	Hydraulic power steering.
BRAKES	Hydraulic power braking on all wheels. In-board mounted, oil immersed, multi-plate disc brakes. Parking brake, electro-hydraulic disc type operating on transmission output shaft.

LOADER DIMENSIONS WITH FORKS

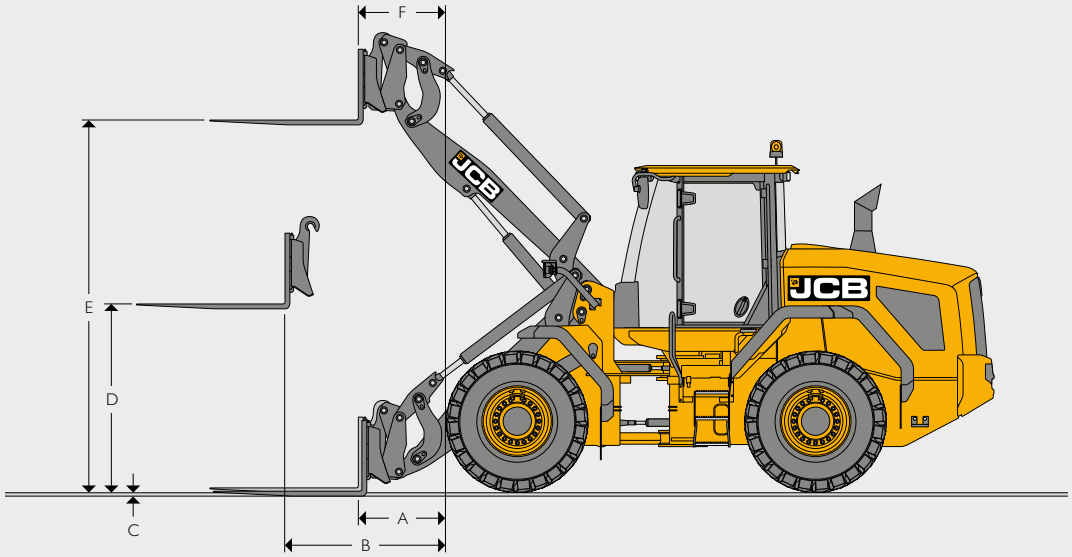

LOADER DIMENSIONS WITH FORKS

			435S		435S HL	
			Parallel	Non parallel	Parallel	Non parallel
	Fork carriage width	mm	1500	1500	1500	1500
	Length of tines	mm	1220	1220	1220	1220
A	Reach at ground level	mm	722	722	1140	1140
B	Reach at arms horizontal	mm	1480	1480	1829	1829
C	Top of tine above ground with arms down	mm	60	60	-2	-2
D	Arms, horizontal height	mm	1895	1895	1894	1894
E	Arms, maximum height	mm	3726	3726	4090	4090
F	Reach at maximum height	mm	741	741	803	803
	Tipping load straight	kg	9781	10505	7700	8142
	Tipping load full turn (40°)	kg	8976	8873	6514	6890
	Payload*	kg	7180	7098	5211	5511
	Attachment weight	kg	429	429	429	429
	Operating weight (includes 75kg operator and full fuel and DEF tanks)	kg	13815	13815	13915	13915

* At the centre of gravity distance 600mm. Based on 80% of FTTL as defined in ISO 14397-1:2007. Assumes the fitment of 750Megxbib tyres and 6 speed transmission

MATERIAL DENSITY

Material	Loose density	Fill factor
	kg/m³	%
Snow (fresh)	200	110
Peat (dry)	400	100
Sugar beet	530	100
Coke (loose)	570	85
Barley	600	85
Petroleum coke	680	85
Wheat	730	85
Coal bitumous	765	100
Fertiliser (mixed)	1030	85
Coal anthracite	1046	100
Earth (dry) (loose)	1150	100
Nitrate fertiliser	1250	85
Sodium chloride (dry) (salt)	1300	85
Cement portland	1440	100
Limestone (crushed)	1530	100
Sand (dry)	1550	100
Asphalt	1600	100
Gravel (dry)	1650	85
Clay (wet)	1680	110
Sand (wet)	1890	110
Fire clay	2080	100
Copper (concentrate)	2300	85
Slate	2800	100
Magnetite	3204	100

BUCKET CAPACITIES

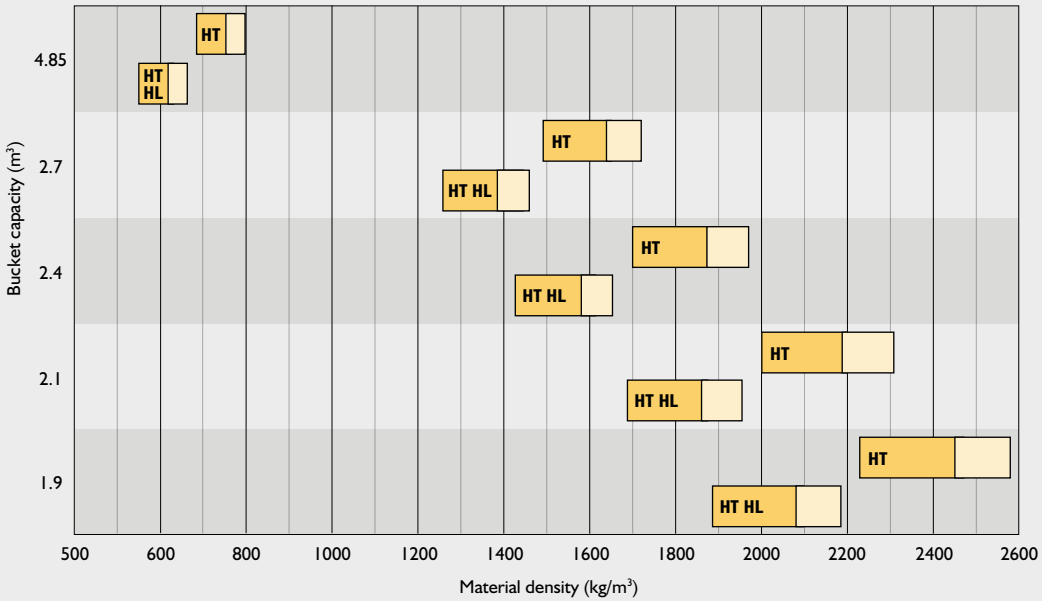

HT = Standard height arm HL = High Lift arm

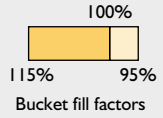

EQUIPMENT

SERVICE AND MAINTENANCE	
5 year LiveLink telematics	•
Engine oil remote drain and fill	•
Grouped pressure test points	•
Lockable tool box	•
Lubrication points accessible from ground level	•

ENGINE	
Air cleaner – cyclonic pre filter with engine fan scavenge system	•
Automatically reversing cooling fan	•
Crankcase breather oil trap	•
DEF fluid	•
Electrical opening rear bonnet	•
Epoxy coated radiator / coolers	+
Swing out fan	+
Fuel filter	•
Fuel pre-filter with water trap	•
Hydraulically driven cooling fan	•
Manual override rear bonnet opening	•
-20° cold start	•
SCR engine emission control	•
Waste gated turbo	•
Widecore radiator	+
Block heater (240V or 110V)	+

ELECTRICAL	
120 amp alternator	•
Amber rotating beacon	•
Electrical adjustable mirrors	•
Heated mirrors	•
External battery isolator	•
Fold down beacon arm	•
Green seat belt beacon	+
Halogen front and rear working lights	•
Hazard warning lights	•
Integrated rear view camera	+
LED front and rear working lights	+
LED 360° working lights	+
Number plate light kit	+
Parking lights	•
Radio wiring and speakers	•
Rear fog light	•
Reverse alarm and light	•
Reversing object detection system	+
Road lights front and rear	•
Smart reverse alarm and light	+
Turn signals	•

ELECTRICAL (CONTINUED)	
White noise reverse alarm and light	+
Work lights in rear grille	•
Bonnet operation alarm	•
Blue LED reverse lights	+

DRIVE TRAIN	
6 speed transmission with lock-up torque converter	•
Epicyclical wheel hub reduction	•
Fixed front axle	•
Gear kick down on loader control lever	•
Indicator glass for transmission oil level	•
Loader lever direction control	•
Neutral start	•
Open differential	•
Open differential with automatic locking -100% (front axle only)	+
Limited slip differentials front and rear	+
Oscillating rear axle	•
Power-inch intelligent clutch cut off on footbrake (selectable)	•
Selectable automatic power shift	•
Steering column single lever shift control (direction and gear)	•
Transmission cooler bypass	+

BRAKE SYSTEM	
Multi-plate wet disc brakes	•
Sintered brake pads	•
Dual circuit hydraulic power	•
Wheel speed braking	•
Parking disc brake on transmission output shaft	•
Electrical hydraulic park brake actuation	•

OPERATOR STATION	
Fully glazed cab	•
Air conditioning	•
Climate control	+
Single lever joystick	•
Multi-lever hydraulic controls	+
Proportional electro hydraulic auxiliary control	+
Air suspension cloth seat	•
Deluxe heated air suspension cloth seat	+
Super deluxe heated and cooled air suspension half leather seat	+
Front roller blind	•
Rear roller blind	+
Cab air intake filter	•
Carbon cab air intake filter	+
2 x 12V in-cab power socket	•
24V in-cab power socket	+

OPERATOR STATION (CONTINUED)	
Reversing camera (colour)	•
Fold away adjustable steering column	•
ROPS/FOPS safety structure	•
Interior light	•
Front primary display screen	•
Secondary A post display screen, rotary control menu interface	•
A post mounted membrane switches	•
Variable fan speed control on climatic control system	+
50 mm seat belt	•
75 mm seat belt	+
Fire extinguisher (UK only)	+
Two speed intermittent front windscreen wipe/wash and self-park	•
Single speed rear windscreen wipe/wash and self-park	•
3 speed heater/demisting	•
LH and RH sliding opening windows	•
Floor mat	•
Cup holder	•
Steering wheel spinner knob	•
Internal rear view mirror	•
Tinted cab glass	•
Multi-media port (USB and 3.5mm)	•
Operator stowage	•
Laminated windscreen	•
Heated rear screen	•
Loader control isolator	•
Horn	•
Adjustable armrest	•
Removable storage rubber mats	•
In-cab coolbox (fridge)	+
Floor carpet	+

FRONT PRIMARY DISPLAY	
Warning lights	
Direction indicators	•
Master warning	•
High coolant temperature	•
Battery charging condition	•
Low fuel level	•
Engine oil pressure	•
Hazard lamps	•
Park brake state	•
Road lights	•
Main beam lights	•
Rear fog lights	•
Engine pre-heat	•
Brake system pressure	•

EQUIPMENT (CONTINUED)

FRONT PRIMARY DISPLAY	
Warning lights (continued)	
Differential lock	•
Low steering pressure	•
Buzzer alerts	
Engine air filter blocked	•
Diesel exhaust fluid (DEF)	•
Torque reduction in case of malfunction	•
Amber warning lamp	•
Stop engine	•
Gauge display	
Engine speed	•
Coolant temperature	•
Fuel level	•
LCD screen display	
Current gear	•
Stop engine	•
Torque reduction in case of malfunction	•
Amber warning lamp	•
Diesel exhaust fluid (DEF)	•
Engine air filter blocked	•
Secondary steer system pressure	•
Torque lockup	•
Steer mode	•
Ground speed	•
Engine speed (numeric display)	•
Clock	•
Hydraulic state	•
Smoothride system (SRS)	+
Beacon	•
Front work lamps	•
Rear work lamps	•
Heated rear screen	•
Transmission sump temperature	•
Data screens	
DEF level	•
Hydraulic oil temperature	•
Torque convertor temperature	•
Volume of fuel remaining	•
Total fuel used (resettable)	•
Instantaneous fuel use	•
Average fuel use (resettable)	•
Current date	•
Machine hours	•
Trip distance (resettable)	•
Hours to service	•

FRONT PRIMARY DISPLAY (CONTINUED)	
Daily checks	
Engine oil level	•
DEF level	•
RIGHT HAND SECONDARY DISPLAY	
Clock	•
Climate control	•
Fan speed	•
In-cab temperature set	•
Machine hours	•
Rear view camera	•
Fuel use	•
Time and date	•
Auxiliary flow rate	•
Hydraulic oil temperature	•
Transmission oil temperature	•
Machine settings screen	
Coolant temperature	•
Engine oil pressure	•
Air filter	•
Transmission sump temperature	•
Transmission torque convertor temperature	•
Transmission sump temperature	•
Hydraulic oil temperature	•
Park brake pressure	•
Battery voltage	•
Help display	•
On-screen handbook	•
HYDRAULIC SYSTEM	
Smoothride system (SRS)	+
Hydraulic quickhitch with in-cab isolation	+
Auxiliary ARV kit	+
Auxiliary hydraulic service	•
Twin auxiliary hydraulic service	+
Twin piston pumps with priority steer	•
Emergency steer back-up	•
JCB biodegradable hydraulic oil	+
Electronic hydraulic isolation	•
Automatic boom kick-out. Detent	•
Automatic bucket positioner	•
Front loader float	•
Indicator glass for hydraulic oil level	•
Hydraulic oil cooler	•

EXTERNAL EQUIPMENT	
Front and rear fenders	•
Front and rear adjustable mud flaps	•
Front wheel spray guards	•
Rear fender chevrons	•
Full tyre width coverage fenders	•
Automatic greasing system	+
Grease gun and cartridge	+
One piece electrical opening bonnet	•
Mesh air intake screens	•
Flexible bottom step	•
Full width rear counterweight	•
Recovery hitch	•
15000kg Rockinger tow hitch with trailer brakes (12V or 24V electrics)	+
Lifting / tie down lugs	•
Rear counterweight chevrons	+
Heavy duty rear counterweight (+276kg)	+
Stainless steel exhaust stack	+
PROTECTIVE EQUIPMENT	
Rear grille guard	+
Safety strut loader arm	•
Light guards	+
Rear belly guard kit	+
Articulation joint safety strut	•
OTHER EQUIPMENT	
HT High Lift loader end	+

STANDARD •

OPTIONAL +

JCB
JCB
JCB
435S

ONE COMPANY, OVER 300 MACHINES.

Your nearest JCB dealer

9999/5729 en-GB 05/16 Issue 2 (T4F)

Wheel Loader 435S

Operating weight: 14366kg Gross engine power: 172kW (230hp)
Full turn tipping load: 8283kg Standard shovel capacity: 2.4m³

JCB Sales Limited, Rocester, Staffordshire, United Kingdom ST14 5JP.
Tel: +44 (0)1889 590312 Email: salesinfo@jcb.com

Download the very latest information on this product range at: www.jcb.com

©2009 JCB Sales. All rights reserved. No part of this publication may be reproduced, stored in a retrieval system, or transmitted in any form or by any other means, electronic, mechanical, photocopying or otherwise, without prior permission from JCB Sales. All references in this publication to operating weights, sizes, capacities and other performance measurements are provided for guidance only and may vary dependant upon the exact specification of machine. They should not therefore be relied upon in relation to suitability for a particular application. Guidance and advice should always be sought from your JCB Dealer. JCB reserves the right to change specifications without notice. Illustrations and specifications shown may include optional equipment and accessories. The JCB logo is a registered trademark of J C Bamford Excavators Ltd.

WORLD LAND TRUST™
www.carbonbalancedpaper.com
unique print number

FSC Mixed Sources
Product group from well-managed forests and other controlled sources
www.fsc.org Cert no. TT-COC-002291
© 1996 Forest Stewardship Council

JCB